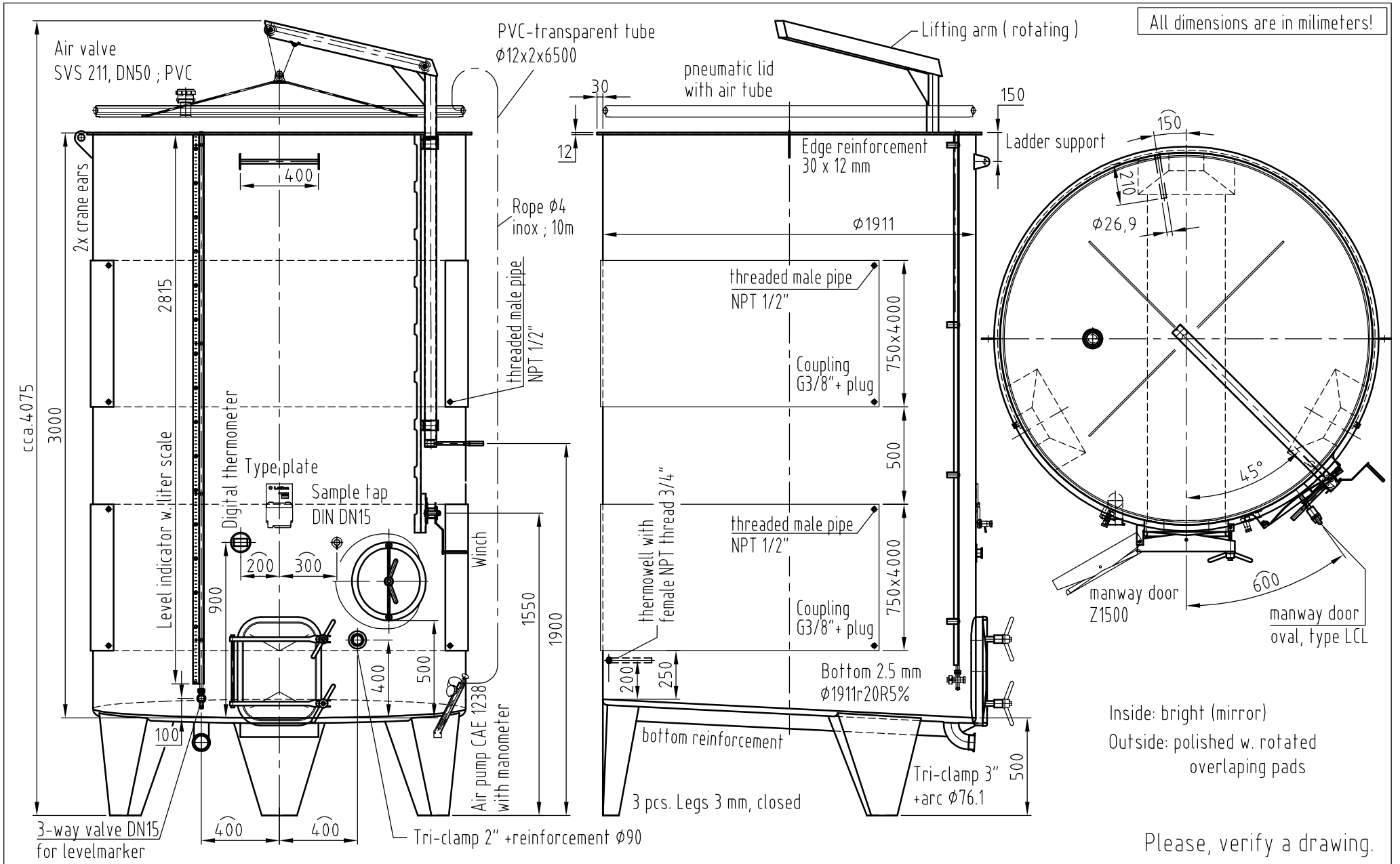
All dimensions are in milimeters!
Air valve
SVS 211, DN50 ; PVC
PVC-transparent tube
ϕ12x2x6500
Lifting arm (rotating)
pneumatic lid
with air tube
30
150
12
Ladder support
Edge reinforcement
30 x 12 mm
150
210
ϕ26,9
ϕ1911
2x crane ears
400
Rope ϕ4
inox ; 10m
threaded male pipe
NPT 1/2"
threaded male pipe
NPT 1/2"
750x4000
Coupling
G3/8"+ plug
500
threaded male pipe
NPT 1/2"
750x4000
Coupling
G3/8"+ plug
thermowell with
female NPT thread 3/4"
2815
cca.4075
3000
Level indicator w. liter scale
Digital thermometer
Type plate
Sample tap
DIN DN15
200
300
900
Winch
1550
1900
400
500
100
Air pump CAE 1238
with manometer
200
250
Bottom 2.5 mm
ϕ1911r20R5%
bottom reinforcement
Tri-clamp 3"
+arc ϕ76.1
500
3 pcs. Legs 3 mm, closed
3-way valve DN15
for levelmarker
400
400
Tri-clamp 2" +reinforcement ϕ90
45°
600
manway door
Z1500
manway door
oval, type LCL
Inside: bright (mirror)
Outside: polished w. rotated
overlaping pads
Please, verify a drawing.