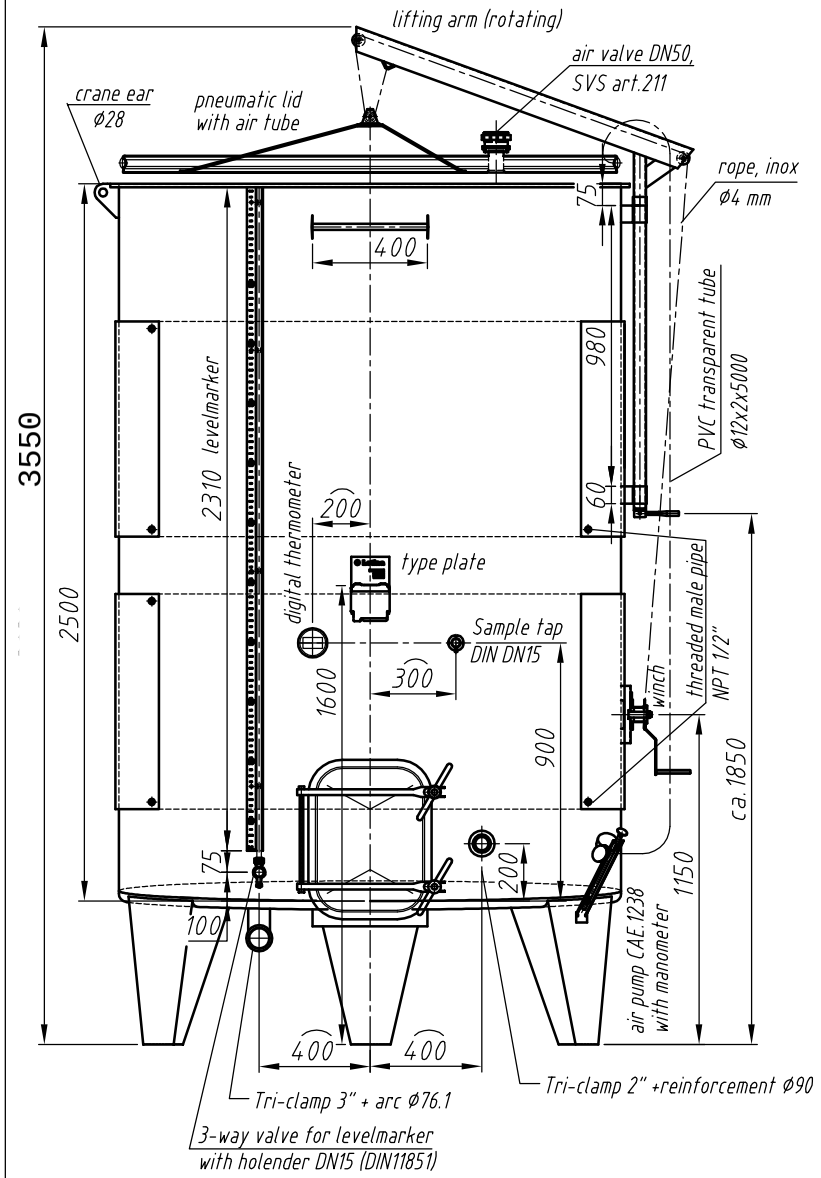

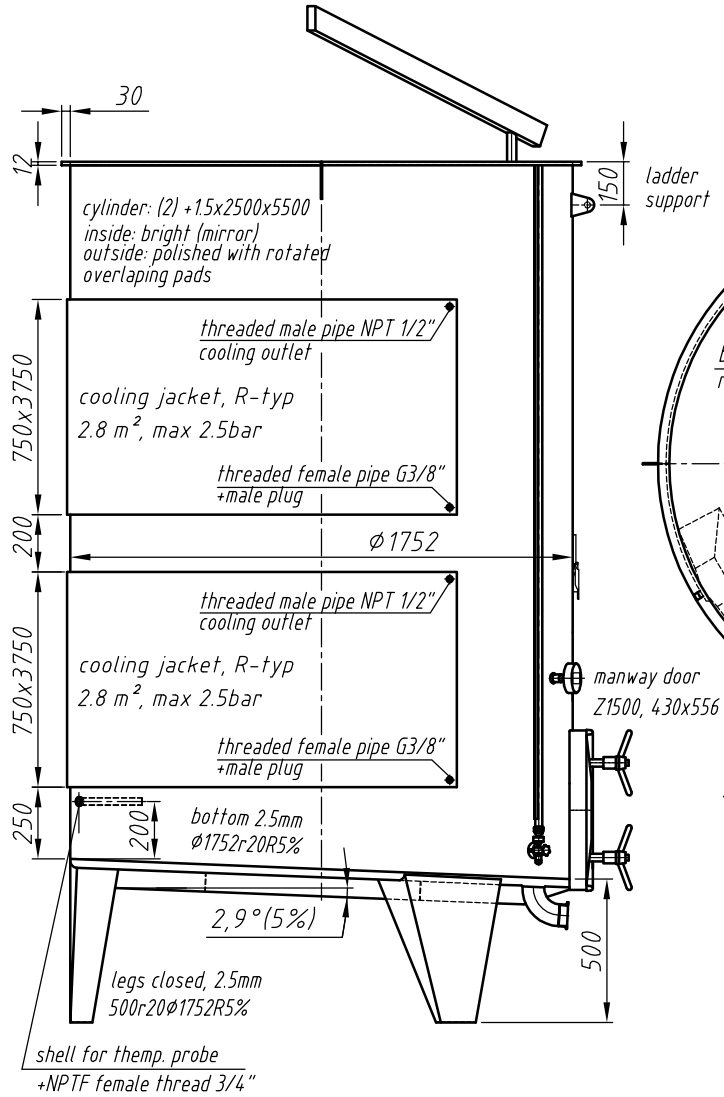

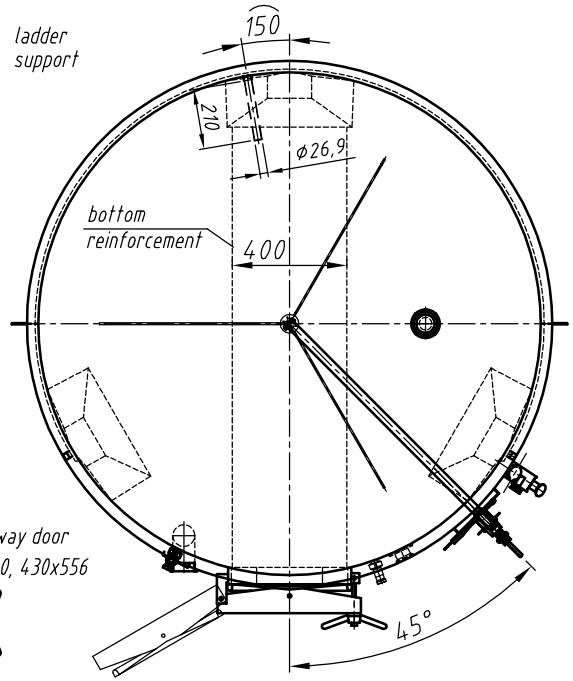

All dimensions are in milimeters!