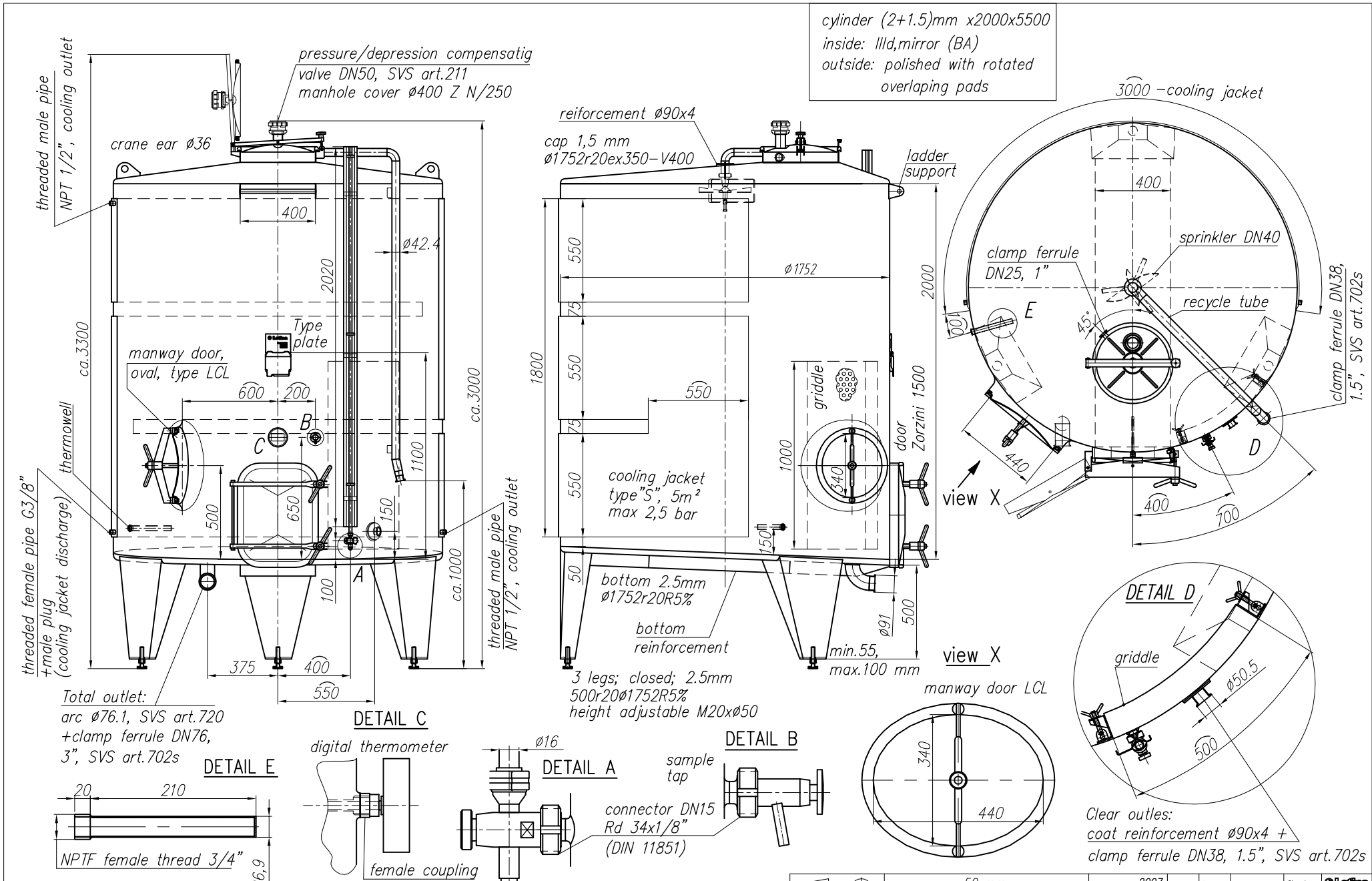
cylinder (2+1.5)mm x2000x5500
inside: IIId,mirror (BA)
outside: polished with rotated overlaping pads
threaded male pipe NPT 1/2", cooling outlet
pressure/depression compensatig valve DN50, SVS art.211
manhole cover ø400 Z N/250
crane ear ø36
400
ø42.4
2020
ca.3300
ca.3000
Type plate
manway door, oval, type LCL
600
200
B
C
thermowell
1100
650
500
150
A
100
ca.1000
threaded female pipe G3/8" +male plug (cooling jacket discharge)
threaded male pipe NPT 1/2", cooling outlet
375
400
550
Total outlet: arc ø76.1, SVS art.720 +clamp ferrule DN76, 3", SVS art.702s
reiforcement ø90x4
cap 1,5 mm ø1752r20ex350-V400
ladder support
550
ø1752
2000
75
1800
550
550
75
550
1000
griddle
door Zorzini 1500
cooling jacket type"S", 5m² max 2,5 bar
340
150
50
bottom 2.5mm ø1752r20R5%
bottom reinforcement
ø91
500
min.55, max.100 mm
3 legs; closed; 2.5mm 500r20ø1752R5% height adjustable M20xø50
3000 -cooling jacket
400
sprinkler DN40
clamp ferrule DN25, 1"
recycle tube
E
45°
100
clamp ferrule DN38, 1.5", SVS art.702s
D
440
view X
400
700
DETAIL D
griddle
ø50.5
500
Clear outles: coat reinforcement ø90x4 + clamp ferrule DN38, 1.5", SVS art.702s
DETAIL E
20
210
NPTF female thread 3/4"
6,9
DETAIL C
digital thermometer
female coupling
ø16
DETAIL A
DETAIL B
sample tap
connector DN15 Rd 34x1/8" (DIN 11851)
view X
manway door LCL
340
440